Bayside Collection

SCHEMATIC SHEET
INDIVIDUAL PIECES

ICON
upholstery collection

DEPTH **42″** SEAT DEPTH **26″** SEAT HEIGHT **17″** ARM HEIGHT **28″** ARM WIDTH **13″** OVERALL HEIGHT **30″** FRAME HEIGHT **28″**

Available Sizes

Due to its unique styling, Bayside is only available as a Sofa, Loveseat or Chair, in these widths: **Sofa** 86″, 96″, 106″, 116″ or 126″ · **Loveseat** 76″ or 86″ · **Chair** 56″ or 66″. Select any fabric, leather or COM.

Sofa

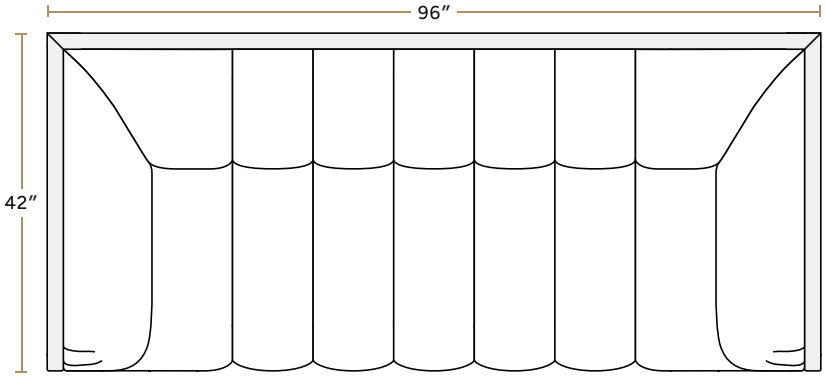

Sofa - 2 Arm
02-2A · 96″w × 42″d

Loveseat

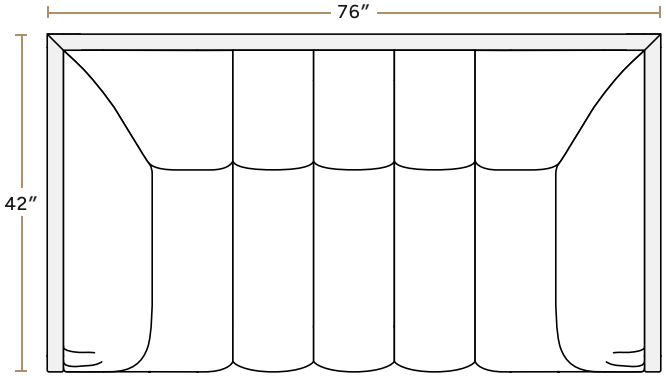

Loveseat - 2 Arm
04-2A · 76″w × 42″d

Chair

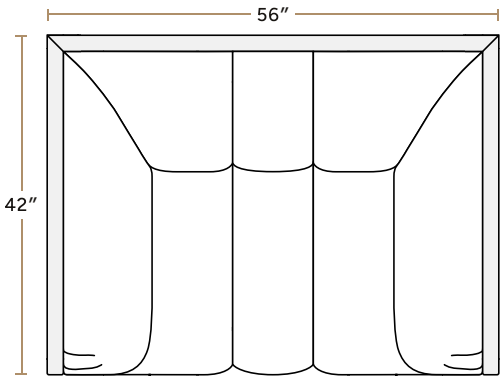

Chair - 2 Arm
07-2A · 56″w × 42″d